AViTEQ
Vibrationstechnik GmbH

BOWL FEEDERS

CONVEYING AND FEEDING BULK MATERIAL TO PERFECTION

Content

Arranging and feeding

Above are connecting elements for boot soles, they are oriented, separated and fed precisely to a loading robot, which loads the parts an injection mould

When parts are required to be received in mass and delivered piece by piece onwards to a production process. Bowl feeders enable pieces to be correctly orientated and delivered in a predefined time period to a down-stream process.

As part of mechanisation parts must arranged in the correct order and alignment. These functions are carried out by bowl feeders – AViTEQ have manufactured these devices for over 80 years.

So to avoid frequent refilling, or when a larger stock of parts are desired, a feed chute can be used. For this, the parts are discharged and fed to the bowl feeder. If the parts are of a suitable size then our small conveyor equipment will be suitable for this application.

The quantity of parts within the bowl are monitored and controlled by our filling level control system.

This automatic system ensures an optimum parts stock in the bowl, so to provide a continual flow of parts along the process line.

Advantages of AViTEQ bowl feeders:

- High capacity with compact dimensions.
- Safe to operate continuously.
- Co-ordinated two-mass vibrating system
- No influence on the drive unit vibration performance due to the weight of the conveyed parts.
- Maintenance-free drive unit.
- Conformity with all EU directives, of which the devices are affected.
- For hazardous areas available, as well as for 60 Hz systems and other mains voltages

II 2 G Ex e IIB T5 II
2D IP 65 T 100 °

Components and feeding

Bowl Feeder drive unit

Parts conveyor with a conical bowl

Vibtronic SRA ... ECU

Small conveyor drive

Small conveyor with conveyor rail

Floor stand with sound Reduction enclosure

Components

So to provide a complete solution, a range of components are used in combination, so to solve the given requirement. Therefore a bowl feeder will often be fed by a small parts conveyor with an open tray and the outfeed from the bowl feeder may require a small parts conveyor with a conveyor rail or gutter trough. For all drives the correct Vibtronic-S controller is required. Support stands and sound enclosures are often provided for specific applications.

Advantages of AViTEQ drives:

- High capacity with compact dimensions.
- Safe to operate continuously.
- Co-ordinated two-mass vibrating system
- No influence on the drive unit vibration performance due to the weight of the conveyed parts.
- Maintenance-free drive unit.
- Conformity with all EU directives, of which the devices are affected.
- For hazardous areas available, as well as for 60 Hz systems and other mains voltages

Feeding

As for many automated assembly and handling technology solutions reliability is very important therefore all drive units are designed with reliability in mind along with efficiency. Generally equipment is specifically configured according to the specific task and parts to be handled.
Through the use of standard components cost benefits are achieved along with reliability.

Stored brackets for yarn bobbins are oriented with this feeding device and fed to two lanes of a winding machine

Bowl Feeders

Bowl Feeder with conical bowl without orientation fixings.

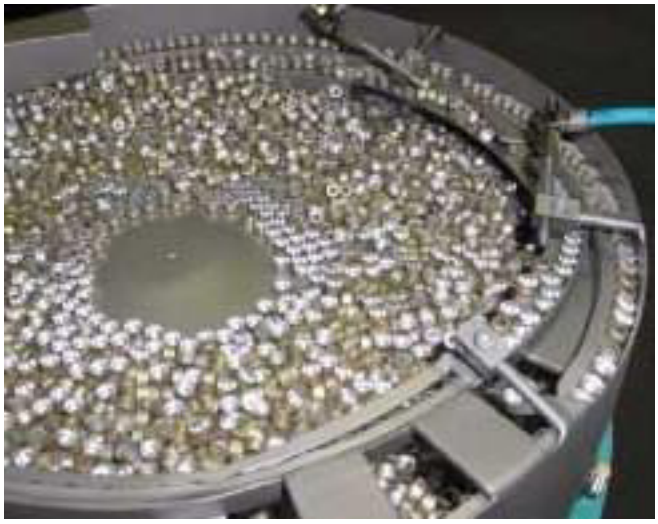

A cylindrical bowl conveyor parts 2-lane for closure caps

Design and Operation

Bowl Feeders are used for aligning and supplying mass parts for automatic devices and equipment. The bowl feeder not only conveys parts, but also allows for a filling volume within the bowl. The filling can be done manually or automatically using a feed trough.

The conveying speed can be adjusted continuously using the Vibtronic-S controller. For separating and aligning parts, special chicane fittings inside the bowl are necessary.

Bowl Feeders are two-mass vibrating systems and are tuned to near resonance. The drive part includes the elements for vibration generation, such as electromagnet and leaf spring packages. The bowl is easily removable from the drive unit. The optimal design and tuning of the system assure a consistent operation.

The bowl feeder stands on rubber pads. This ensures very little vibration being transmitted into the surrounding area.

Bowl Feeder

The normal form of the bowls are cylindrical, in certain cases, conical or step bowls are required. Such a bowl is selected when parts tend to become interconnected with each other.

The choice of bowl diameter depends on the size of the parts to be conveyed. The rule is that the largest dimension of the part is about 1/6 the bowl base diameter. Normally, each bowl is only equipped with a helical track.

Bowl material

Bowls are manufactured from stainless steel. Smaller bowl sizes can also made of polyamide or aluminum, where possible.

Depending on the specific requirements, the bowls can be fitted with different linings such as polyurethane, Teflon or conveyor brush material.

Aligning parts by mass

Parts that move on the helical path upwards, are initially separated. As the parts move to the outer edges of the bowl the parts then begin to travel upwards towards the outlet spout. The parts are aligned and orientated by special chicane installations. They cause incorrectly positioned parts to fall back into the bowl. Parts must be reviewed for their shape and center of gravity so to determine if the parts can be aligned or orientated by bowl feeder technology.

Bowl feeder TF 600 SF with cone bowl and Chicane fixtures for ordering up to 1000 nails per minute

Ejection amount

The more difficult the alignment, the lower the discharge amount. For simple uniform shapes such as nails 50 mm in length, emissions figures of approx. 1000 pieces / min can be achieved.

Parts that can be aligned with simple manipulation, without the need for complex bowl features can operate at speeds up to 15 cm / s. While complicated installations the conveying speed is much lower. The optimal speed can be adjusted continuously. However, the conveying rate is heavily influenced by how the parts are presented to the bowl feeder initially if many parts are correctly orientated then the speed will be higher and vice-versa.

Type designation have the following meanings:

TFH 400 (EEx) -R / K 635 VA

- TFH — Bowl Feeder drive
- 400 — size, Diameter "c" in mm
- (EEx) — explosion-proof (ATEX)
- -R — conveying direction, R = clockwise, L = anti clockwise
- K — Bowl form, Z = cylindrical bowl, K = taper bowl, S = Progressive bowl
- 635 — top bowl diameter "A" in mm
- VA — Bowl material, VA = stainless steel, AL = aluminum, P = polyamide

Equipment

Supplying steel nuts for installation work. By the use of sound enclosure a noise level reduction of 25 dB (A) was realized. The floor stand enabled fine height adjustment.

Sound enclosures

When conveying parts made of hard or thin material the vibration movement can create nuisance noise. These can be intense depending on the application conditions. Reduction of this noise can be achieved by a sound absorbing coating. A more effective solution is possible using a sound enclosure.

Depending on the maximum noise level a reduction of 10 to 25 dB (A) can be obtained.

The sound enclosures are also used to protect the conveyed items from dust or dirt.

The stainless steel hoods have a continuous mounting flange for easy mounting.

Floor stand

Often bowl feeders must be positioned for feeding an automation device, therefore an independent support maybe required.

A floor stand can be utilized to allow the bowl feeder to be positioned in a specific location and the units height can be accurately adjusted to meet the requirements on the down-stream automation device.

Small conveyor equipment

Small conveyor drive for various attachments (rail, tray, pipe, etc.)

Small conveyor with 3 rails for orderly storage and conveying parts

Small feeding device Trough for conveying and dosing of bulk materials

Construction and Notes

For conveying parts from or to the bowl feeder, a corresponding small conveyor can be selected. These conveyors can be selected to constantly fed parts. Small conveyor equipment are selected depending on the size of the parts. Here, the driving part having a gutter trough is provided. A large number of different tray dimensions and hoppers are listed in the special brochure "Compact Feeders."

Small conveyor equipment (linear conveyor) also serve as a transport or storage line between a bowl feeder and downstream device or machine. In this case, a conveyor track is set to the small conveyor drive, the track must be designed precisely to suit the given part shape.

If the customer is to design their own attachment, they must ensure there is sufficient vibration stiffness. Long attachment lengths, low side walls without longitudinal stiffness or large widths without stiffening ribs are to be avoided. The nominal weight must be considered.

Electrical connection

Vibtronic-S-control device of the series SRA ... in housing execution

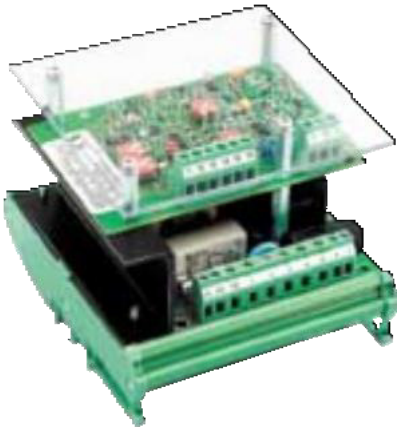

Vibtronic-S control gets the SRAE ... series in installation version for DIN rail mounting

Vibtronic-S controllers

Modern electronic controllers of the type series SRA ... ensure the safe operation of vibratory feeders with a current draw up to max. 6 amps.

Through various standard features and additional options they can be used in a wide variety of applications.

The SRA controller enclosure incorporates a potentiometer for fine adjustment and power switch, the terminals for vibratory feeders and sensor technology are pluggable. The SRAE controller may be snapped onto a standard EN50022 be so easily incorporated in a switching cabinet.

As standard, features include:

- The output voltage is regulated. Thus, the amplitude remains constant even with variations in the mains voltage in the range +/- 10%.
- The change in vibration amplitude and thus the flow rate of almost 0 to 100% is carried out setpoint proportional.
- To change the vibration amplitude are optional, external control signals are possible 0 ... 10VDC; 0 ... 20 mA; 4 ... 20 mA.
- Relay output z. For example, for link or remote monitoring.
- Release option optionally by switches (permanent contact, isolated) or voltage signal (+24 V DC).

Drives with a current consumption of about 6 A (z. B. TF 600) control units of type SC ... are required. For special applications frequency control devices of the type SFA ... are available.
This microprocessor-controlled devices generate an accurate frequency to operate the oscillation conveyor. This controller allows fine frequency adjustment so to allow for increased product load.
A close loop regulation mode can be achieved when used in combination with an acceleration sensor (Type PAA ...)

To link feeders in the assembly and handling technology you need different sensors and optional features, which take over the control of the components. When used in hazardous locations special conditions for control units with protection unit apply. These controllers must not be housed in a potentially explosive area.

All control devices meet concerning electromagnetic compatibility (EMC), EC Directive 89/336 / EEC and amendments gen 91/263 / EEC, 92/31 / EEC

Control

In the storage circuit fill a linear conveyor and a buffer section is monitored and the upstream parts controlled conveyor accordingly. The device detects the presence of parts in the rail (in this light barrier fork type GLA ...)

A mechanical sensor (filling level probe) allows for correct filling level to be known.

Control Functions

To link feeders in the assembly and handling technology, controllers often require different sensors so to provide overall system control.

Storage circuit (Overflow control)

To ensure that the manufacturing process receives enough parts in the correct orientation and position available, the parts conveyor must have a slightly higher capacity than normally required. Therefore with the use of a device such as a light barrier if no parts are seen within the feed conveyor it is possible to increase the feed rate so to ensure there is sufficient parts for the down-stream process. Once parts are seen again by the light barrier to speed can be reduced to the normal setting.

Level control (level scan)

So to ensure the bowl feeder is continually full of parts, level scanning can be employed within the bowl. These devices ensure the infeed conveyor runs until the bowl feeder has enough parts stored within the bowl. Once full the infeed conveyor will stop automatically. Several devices are available these include the level sensor Type FT-1 or the optical sensor type OSR 50-01.

The bowl feeder controller must be linked with that of the pre-connected small conveying device (Bunker).

Organising mass parts

Examples of Chicane devices

Designation	Chicane Installation	Type of Parts	Function
Scraper	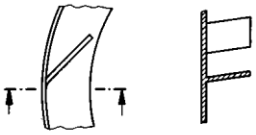	All types	Overlapping parts are stripped. For thin slices see “Inclined Spiral”.
Cut-Out	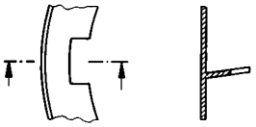	All types	Adjacent parts fall back into bowl.
Inclined Spiral	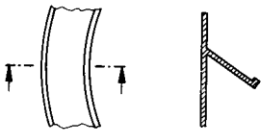		Chamfered discs convey when facing up.
Overflow protection	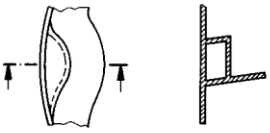	All types	Ensures steady flow of parts, it too many parts are present they fall back into the bowl.
Support Slot	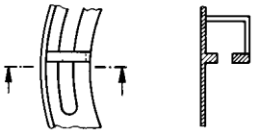		Stem-heavy parts swing in the slot and are suspended from the head.
Tongue	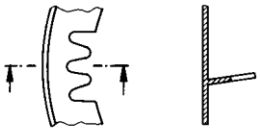	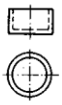	Flat bottom parts can only continue.
Toppler	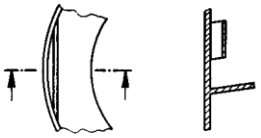		
Cut-out combined with overarching holder	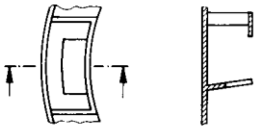	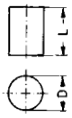	Parts can continue if standing, lying parts fall back into the pot. Condition: $\frac{L}{D} \geq 1$
Adjustable Cut-Out	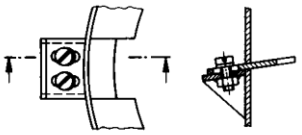	All types	Same function as "cut-out", adjustable slide bar, allows easy adjustment.
Rail	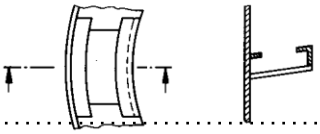		Parts can continue if cap is on top.

Bowl Feeder and Cylinder bowls

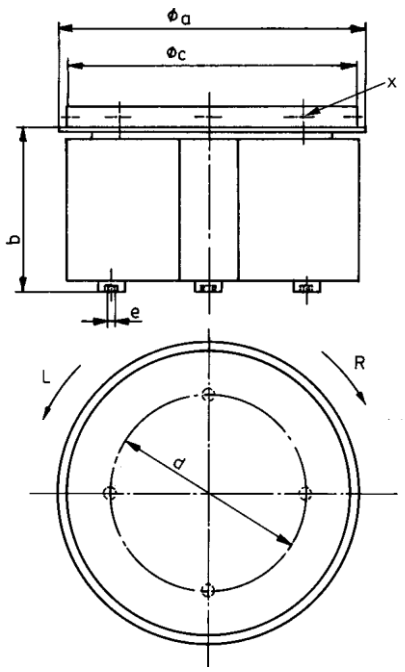

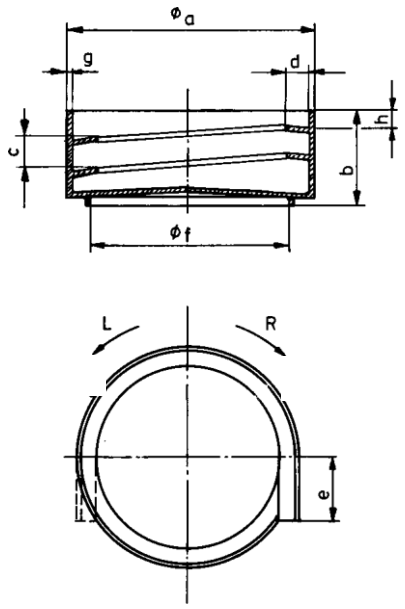

Bowl Feeder drives

Type[1)]	Suitable for bowls with a Base ø[3)]	Weight (without bowl)	Frequency at network	Max. Current at 230 V, 50 Hz	Protection to EN 60529	Max. ambient temperature
	mm	kg	50 Hz	A		° C
TFH 160 R / L	160	8.5	6000	0.6	IP 55	40
TFH 280 R / L[2)]	280	26.0	6000	3.0	IP 55	40
TFH 400 R / L[2)]	400	64.0	6000	5.2	IP 55	40
TF 600 R / L	600	85.0	3000	7.0	IP 55	40
TF 600 SF R / L	600	197.0	3000	7.0	IP 55	40

1) R = clockwise, L = counter-clockwise. specify when ordering!
2) Also available for hazardous areas, the same data type designation eTFH ... (EEX).
3) Max. Weight and bowl diameter according to the tables to "Cylinder, Cone, and step bowls".

	dimensions in mm					
Type	a	b	c	d	x	e
TFH 160 R / L	178	135	160	106	4 pcs M6x12	4 pcs M4x4,5
TFH 280 R / L	292	165	280	180	4 pcs M8	4 pcs M6x6
TFH 400 R / L	428	230	400	270	4 pcs M8	4 pcs M8x7
TF 600 R / L	630	260	600	530	6 pcs M8	4 pcs M10x11
TF 600 SF R / L	630	310	600	530	6 pcs M8	4 pcs M10x11

Cylinder bowls

For drive	useful vol.	mass	dimensions in mm								Material
Type	dm³	kg	a	b	c	d	e	f	G	H	
TFH 160	0.4	0.9	163	70	20	12	50	160	1.5	6	stainless steel
	0.7	1.5	213	80	25	18	80	160	1.5	6	stainless steel
TFH 280	2.0	3.0	284	110	33	25	100	280	2.0	12	stainless steel
	3.0	4.0	340	135	45	33	120	280	2.0	14	stainless steel
TFH 400	6.0	7.0	404	175	60	40	140	400	2.0	15	stainless steel
	18.0	13.0	555	215	70	50	220	400	2.0	15	stainless steel
TF 600	18.0	20.0	605	200	70	60	250	600	2.5	23	stainless steel

Cone and Step pots

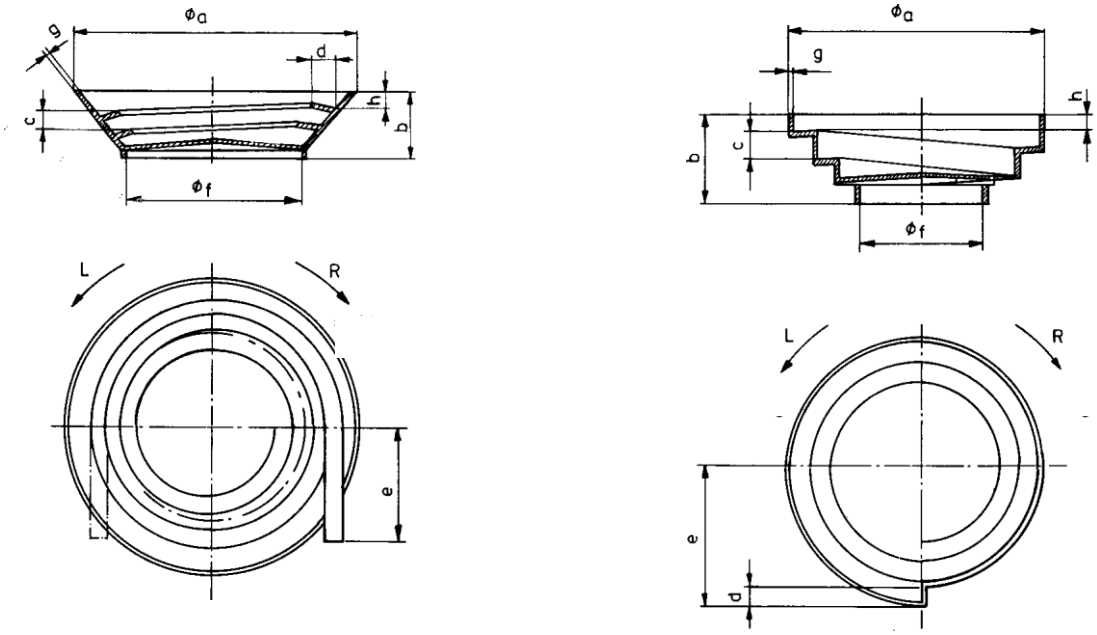

Cone bowls

For drive Type	useful vol. dm³	mass kg	dimensions in mm a	b	c	d	e	f	G	H	Material
TFH 160	0.8	1.5	225	95	20	12	95	160	1.5	10	stainless steel
TFH 280	2.5	4.0	430	130	33	25	140	280	2.0	13	stainless steel
TFH 400	8.0	11.0	635	205	60	40	220	400	2.0	15	stainless steel
TF 600 SF	23.0	26.0	920	255	75	55	320	600	2.5	30	stainless steel

Step bowls

For drive Type	useful Füllvol. dm³	mass kg	dimensions in mm a	b	c	d	e	f	G	H	Material
TFH 160	0.8	1.5	225	110	20	12	120	160	2.0	20	stainless steel
TFH 280	2.5	4.0	370	130	30	23	200	280	2.0	20	stainless steel
TFH 400	6.0	9.5	560	215	60	37	300	400	2.0	30	stainless steel
TF 600 SF	20.0	27.0	905	245	65	75	500	600	2.5	50	stainless steel

Sound enclosures and floor stand

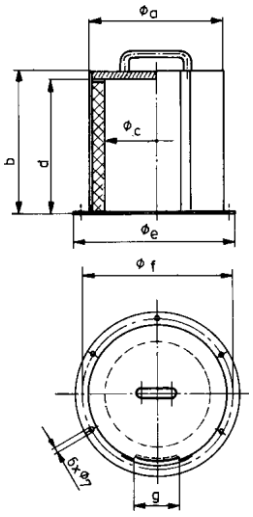

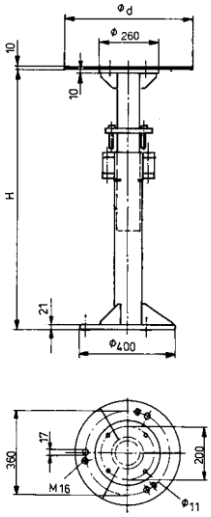

Sound enclosures

Type	mass kg	Dimensions in mm a	b	c	d	e	f	G1)
LSH 1	4.0	220	235	170	220	260	240	70
LSH 2	5.0	270	245	220	230	310	290	80
LSH 3	7.5	340	305	290	290	380	360	120
LSH 4	9.5	400	330	350	315	440	420	150
LSH 5	13.0	500	435	450	420	540	520	190
LSH 6	17.0	700	490	650	475	740	720	250
LSH 7	32.0	1070	770	1015	755	1110	1090	320

1) Slide width for the passage of the bowl spout

Floor stand for parts conveyor with / without sound enclosures

Type	H min. mm	H max. mm	mass kg
THS 400	370	470	33
THS 500	450	550	34
THS 600	550	650	35
THS 700	600	800	36
THS 900	700	1000	39
THS 1100	900	1200	42

Mounting plates for floor stands

To parts conveyor

Type	d in mm
TFH 160	On stand
TFH 280	On stand
TFH 400	380

to sound enclosure

Type	d in mm
LSH 1	On stand
LSH 2	310
LSH 3	380
LSH 4	440
LSH 5	540
LSH 6	740

Electronic Control Units

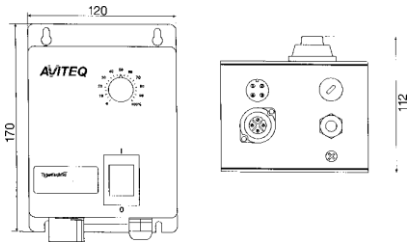

Controller SRA ...

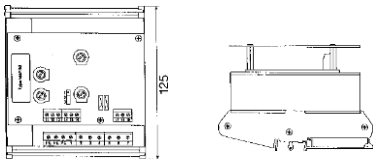

Controller SRAE ...

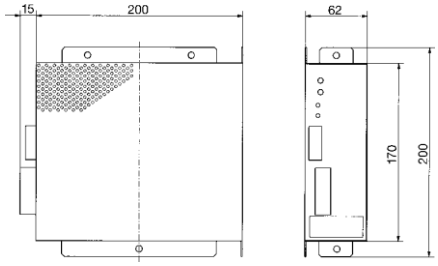

Control unit SCE ...

for bowl feeders

	Freq. at 50 Hz	Controller 230 V, 50 Hz without jam / level Control				Controller 230 V, 50 Hz with jam / Level Control			
Type	min^{-1}	Type	A		kg	Type	A		kg
TFH 160	6000	SRA-C100 / 01-1-1	6.0	IP 54	1.4	SRA-C100 / 01-2-1	6.0	IP 54	1.4
		SRAE-C100 / 01-1-1	6.0	IP 00	0.7	SRAE-C100 / 01-2-1	6.0	IP 00	0.7
TFH 280	6000	SRA-C100 / 01-1-1	6.0	IP 54	1.4	SRA-C100 / 01-2-1	6.0	IP 54	1.4
		SRAE-C100 / 01-1-1	6.0	IP 00	0.7	SRAE-C100 / 01-2-1	6.0	IP 00	0.7
TFH 400	6000	SRA-C100 / 01-1-1	6.0	IP 54	1.4	SRA-C100 / 01-2-1	6.0	IP 54	1.4
		SRAE-C100 / 01-1-1	6.0	IP 00	0.7	SRAE-C100 / 01-2-1	6.0	IP 00	0.7
TF 600	3000	SFA 08 / 01-2-1	8.0	IP 54	4.0	SFA 08 / 01-3-1	8.0	IP 54	4.0
		SCE DN50-2	14.0	IP 20	2.0				
TF 600 SF	3000	SFA 08 / 01-2-1	8.0	IP 54	4.0	SFA 08 / 01-3-1	8.0	IP 54	4.0
		SCE DN50-2	14.0	IP 20	2.0				

Sensors

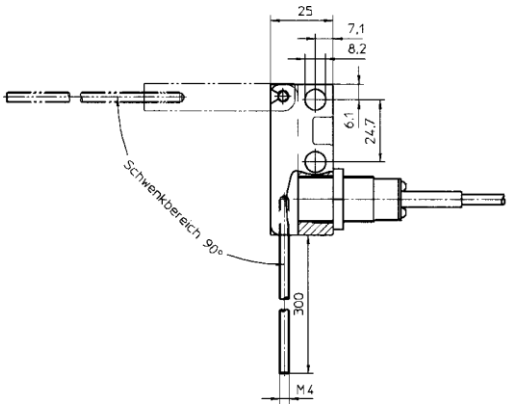

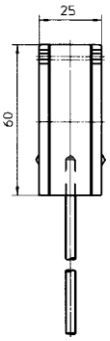

level switch FT 1-1

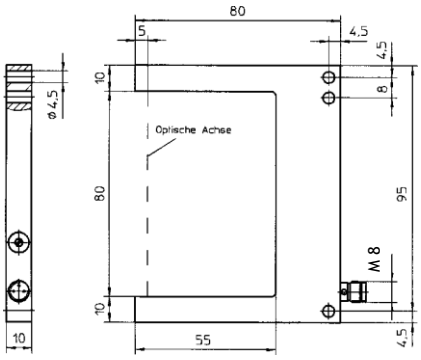

Light barrier GLA 80-01

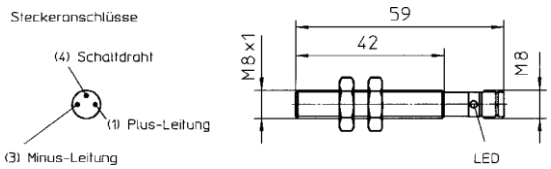

Proximity sensor INS-2S295

The information of the type designation have the following meanings:

example

SRA E-C50/01-2-1 SR A A E -C50 01 -2 -1

Control, Voltage Controlled

Generation of device

Panel Mounting,

without „E“ Cabinet Design

Size und Frequency
C50 (6A; 3.000/3.600 min^{-1})
C100 (6A; 6.000/7.200 min^{-1})

Mains Supply Voltage
00 = 105-115 V
01 = 220-240 V

Type
1 = without special functions
2 = Jam and level control

Version Number

When using devices for potentially explosive areas, e or d, eg. For example: eSRAE-C50 / 01-1-1

e = Control unit is to be located outside of the potentially explosive area

d = Control unit flameproof encapsulated for use in potentially explosive atmospheres

Sensor connection

The sensors are pluggable. For the connection to the control device a connecting cable (Type-M8 W ...) is required. The cable is provided on the sensor side with an angled plug. On the control device side, the individual cores are stripped.
For control units with housing (SRA ..) are the sensor circuit via the built-in sensor housing outlet. The associated transmitter plug is included with the control unit and must be mounted on the connecting cable.
In control devices Incorporated (SRAE ...) of the sensor is fed through the connection cable to the appropriate terminals.

Sensor for storage circuit (Overflow control).

The sensor is mounted on a suitable support and scans the current filling of the slide rail, linear conveyor or buffer section or magazine.

Control unit the switching off and on of the upstream parts conveyor.
Light-barriers (type GLA ...) in different fork widths, the inductive proximity sensor (type INS ...) or the optical sensor (Typ OSR…).

Sensor for level control (level sensing).

The sensor is to be attached to a suitable stand and scans the current filling of the parts conveyor pot. Depending on the pot filling the drag lever is deflected or not. As a result, it controls the switching on and off of the upstream small conveyor or dosing unit via the assigned control unit.
The sensor used is the level sensor (type FT ..) or the optical sensor (Typ OS